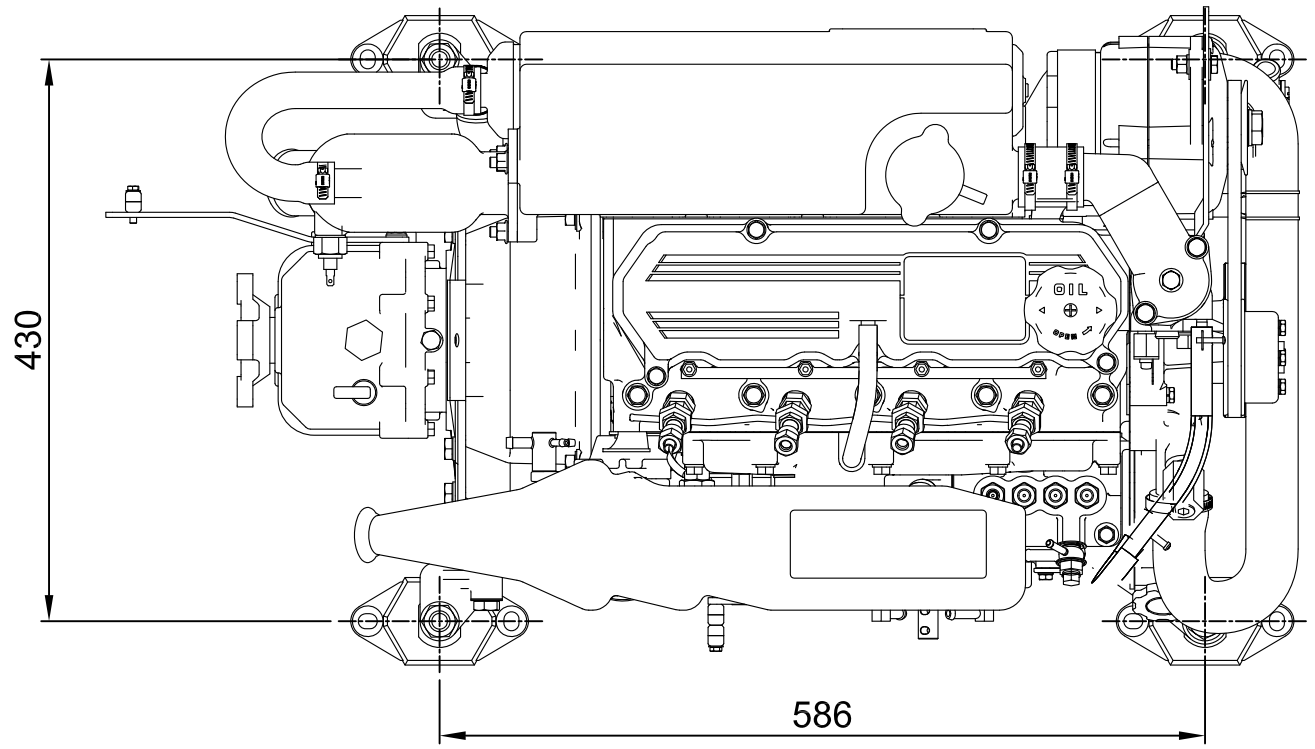

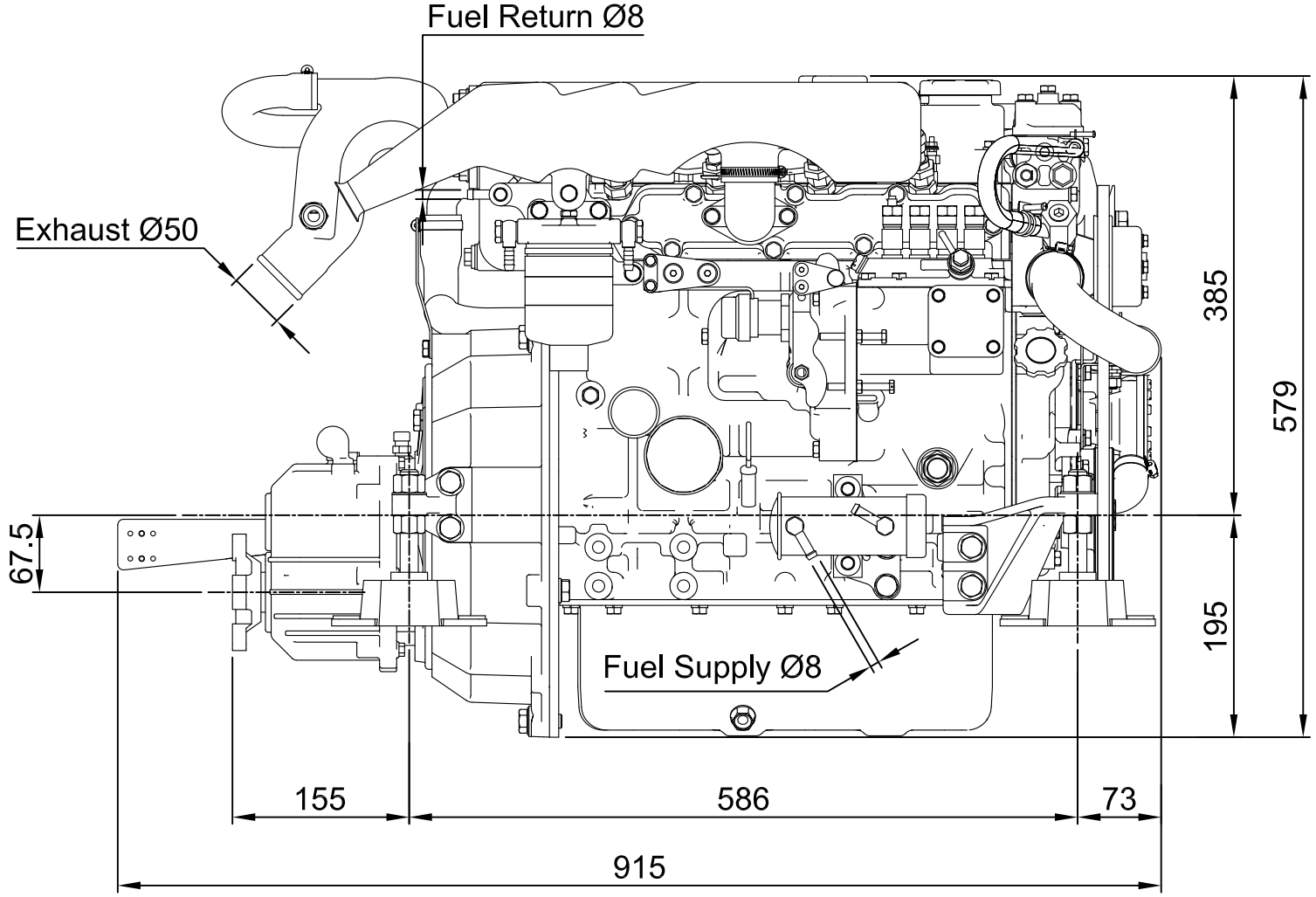

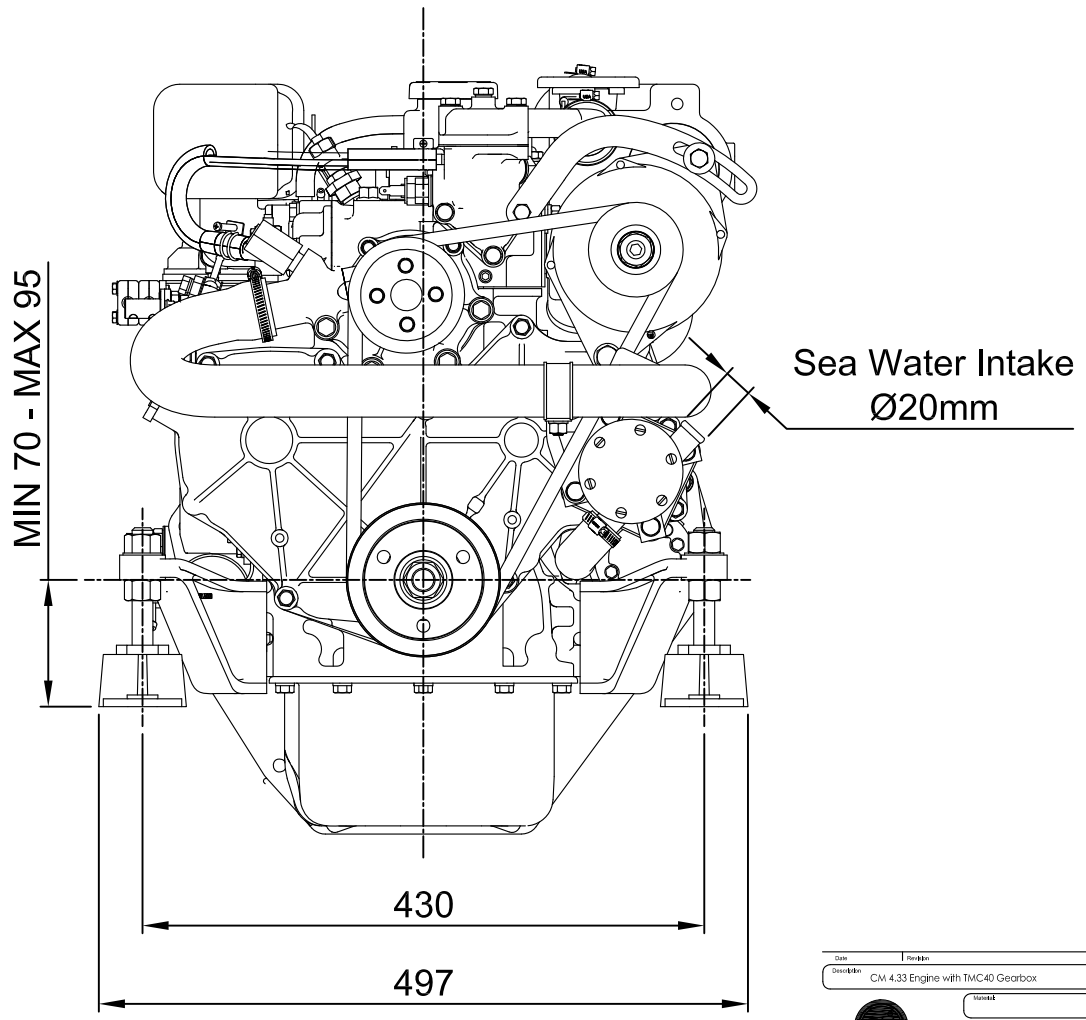

Date	Revision	Supply
Description: CM 4.33 Engine with TMC40 Gearbox		Dwg.no.: -
	Material:	Weight:
Scale: 1:2 1:2	Proj:	Date:
Drawn	Checked	Spec: A/L Qty.: 1 mm
Product group		Sheet: 1 of: 1

Craftsman Marine

Vlissensilo Ijenoord 70, 3319KW Dordrecht, The Netherlands, Tel: +31 (0)88 0062600, Fax: +31 (0)88 0062601 • info@craftsmanmarine.com • www.craftsmanmarine.com

This drawing is the property of Craftsman Marine B.V.. Copyright reserved acc. Sec.38 is not to be copied in whole or in part or otherwise disclosed without the written consent of Craftsman Marine B.V..