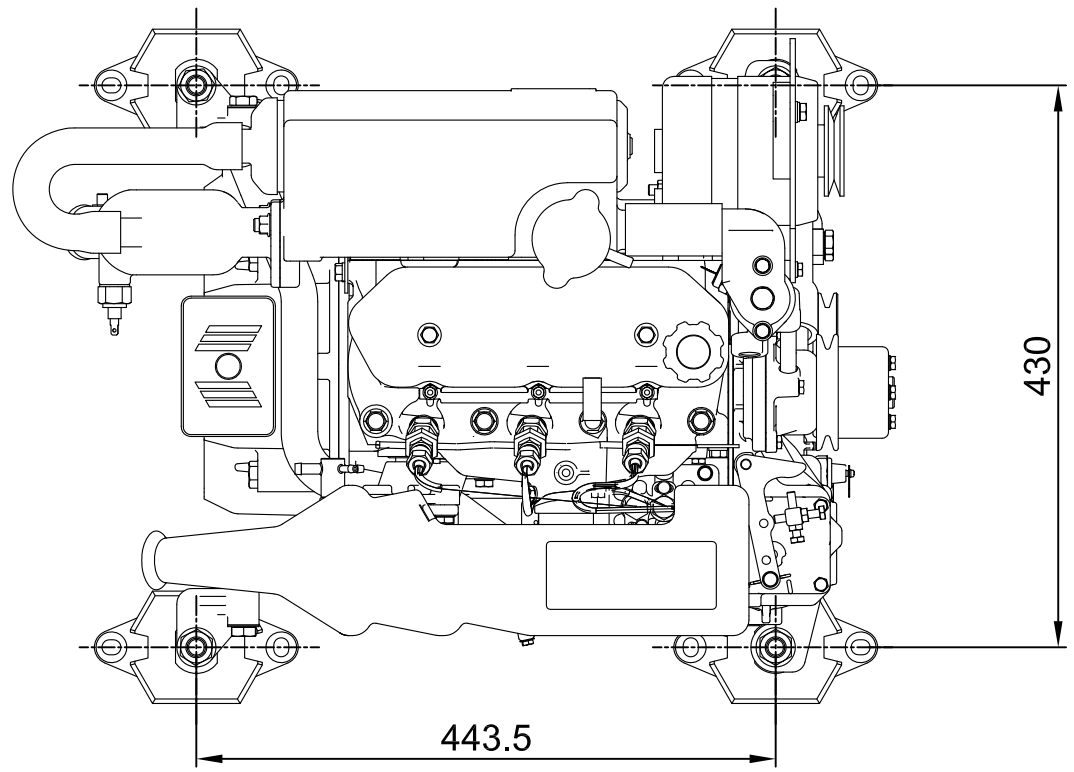

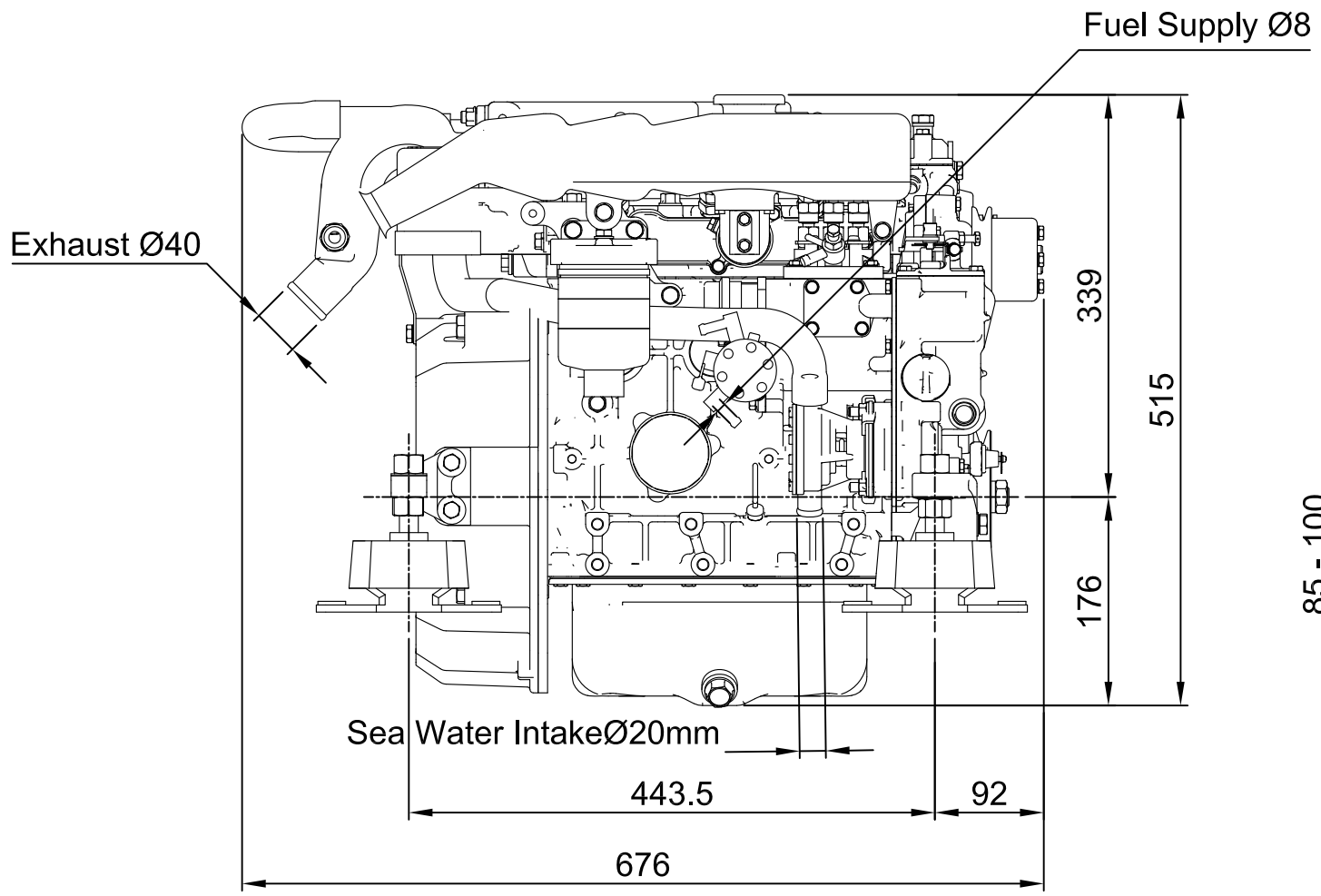

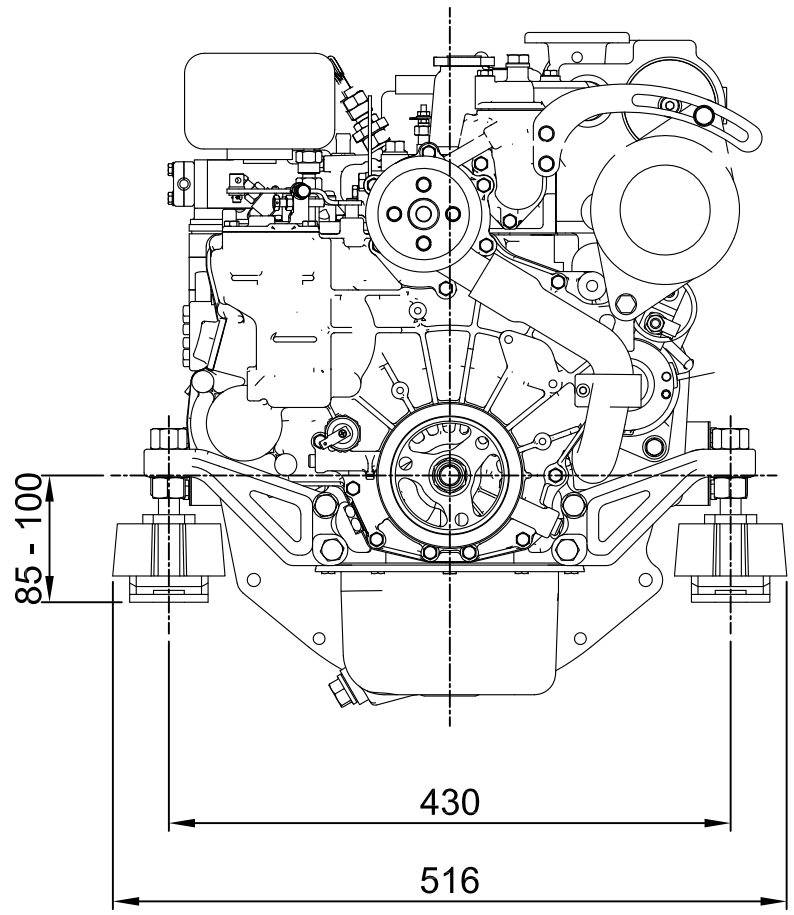

Date	Revision	Initials

Description: CM 3.27 Engine without Gearbox

Drawn no.: -

Material: Weight:

Scale: 1:2 Proj.: Date:

Drawn: Checked: Spec: AOL Dim.: mm

Product group: Sheet: 1 of: 1

Craftsman Marine

Vlasverstraat 70, 3319BGW Dordrecht, The Netherlands, Tel: +31 (0)88 0882000, Fax: +31 (0)88 0882001 • info@craftsmanmarine.com • www.craftsmanmarine.com

This drawing is the property of Craftsman Marine B.V., Dordrecht. Copyright reserved acc. Berne. It is not to be copied in whole or in part or otherwise, disclosed, without the written consent of Craftsman Marine B.V.